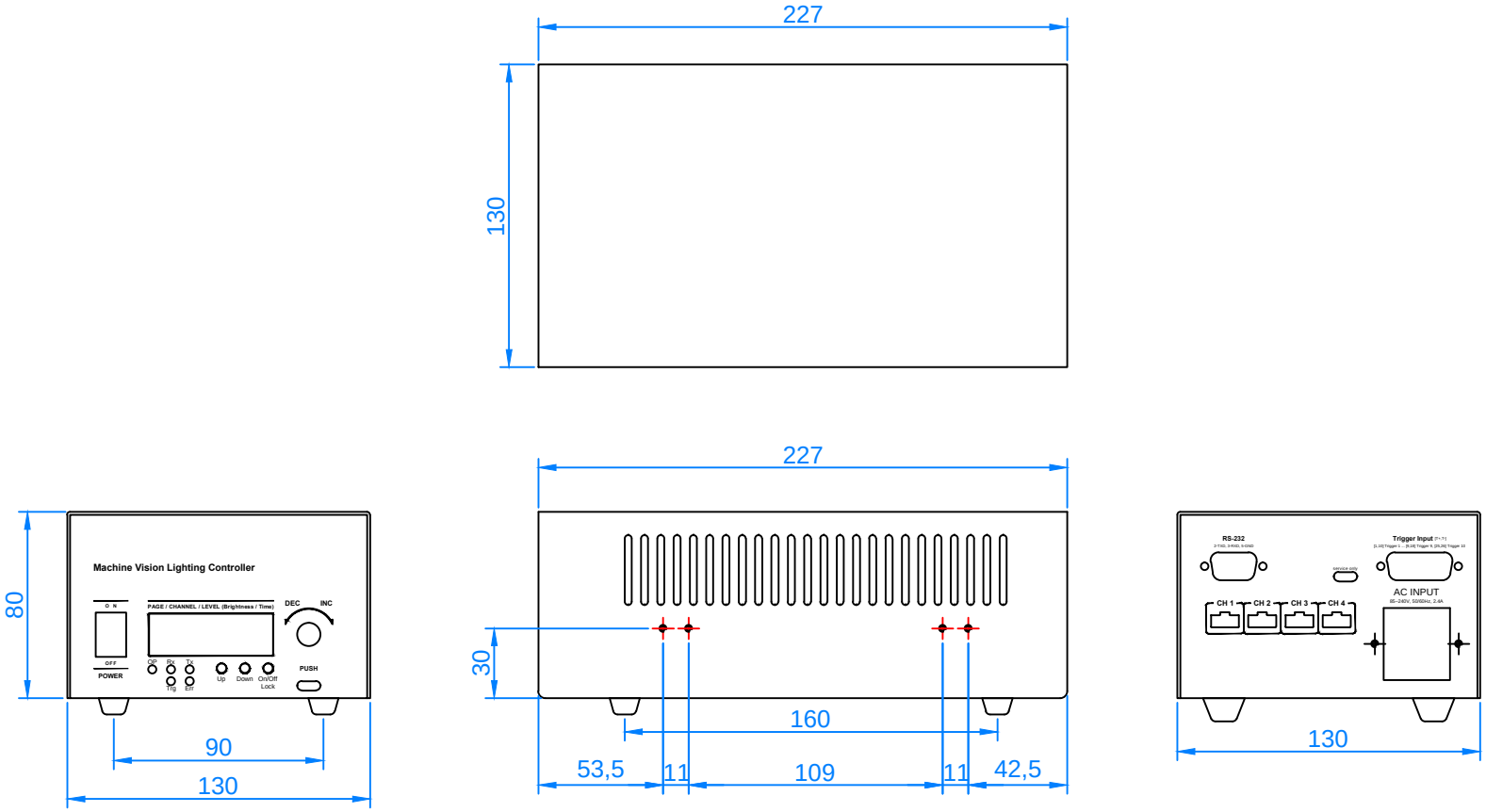

CLASS OF FINISH		GENERAL TOL.(MACHINE)		
~	–	NOMINAL DIM.(MM)		TOL.
▽	50 S	OVER 0.5	UNDER 6	±0.1
▽▽	12.5 S	6	30	±0.2
▽▽▽	3.2 S	30	120	±0.3
▽▽▽▽	0.8 S	120	315	±0.5
		315	1000	±0.8
		1000	2000	±1.2
		OVER 2000		±1.5

△									
NO.	REVISION					DATE	DRAWN	CHECK	APPROVE
UNIT	MM	DRAWN	DESIGN	CHECK	APPROVE	ASS'Y DWG NO.			
SCALE	1/1	K.K.LEE				TITLE.			
DATE									
						DWG. NO.		REV.	